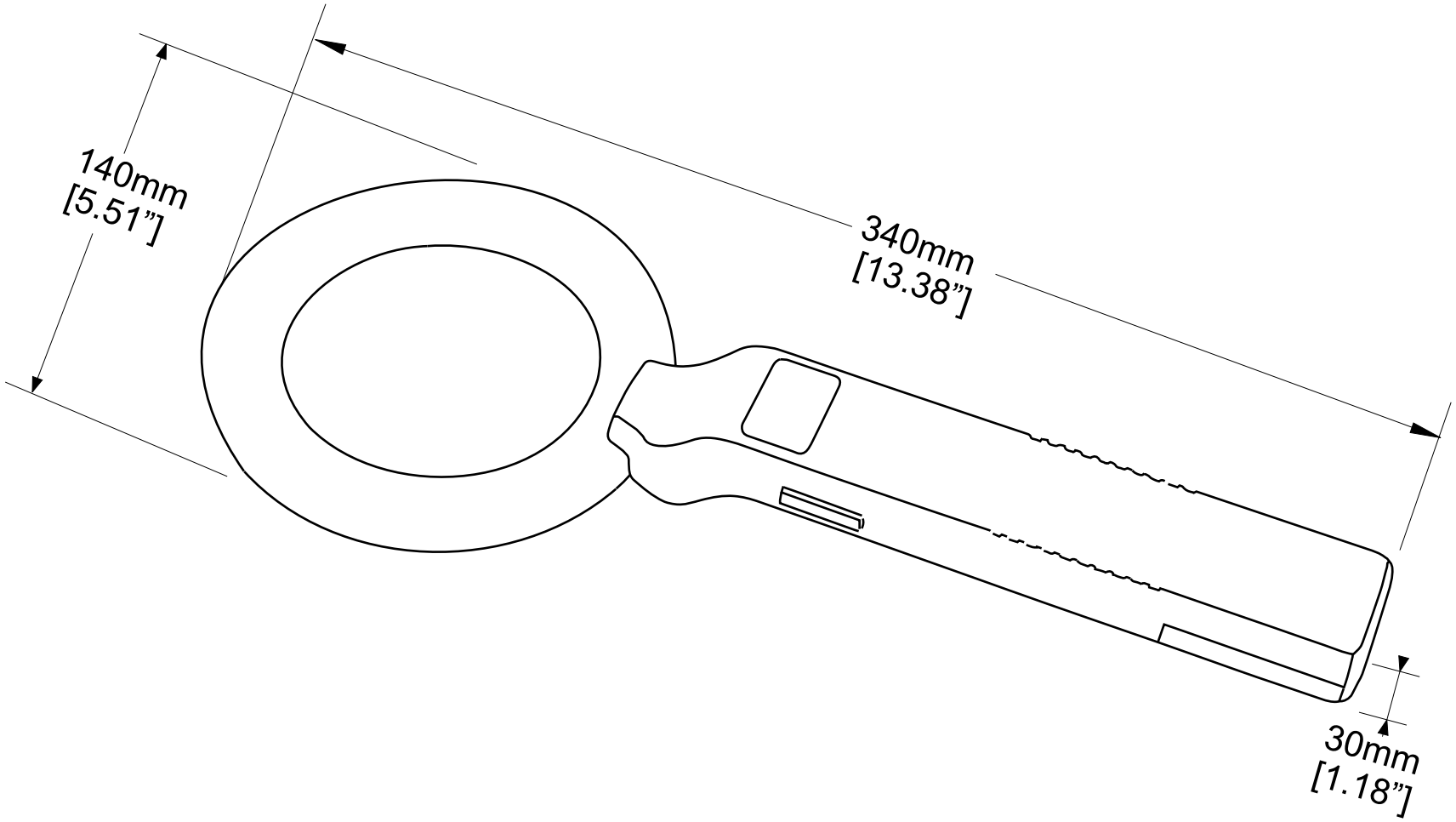
140mm
[5.51”]
340mm
[13.38”]
30mm
[1.18”]