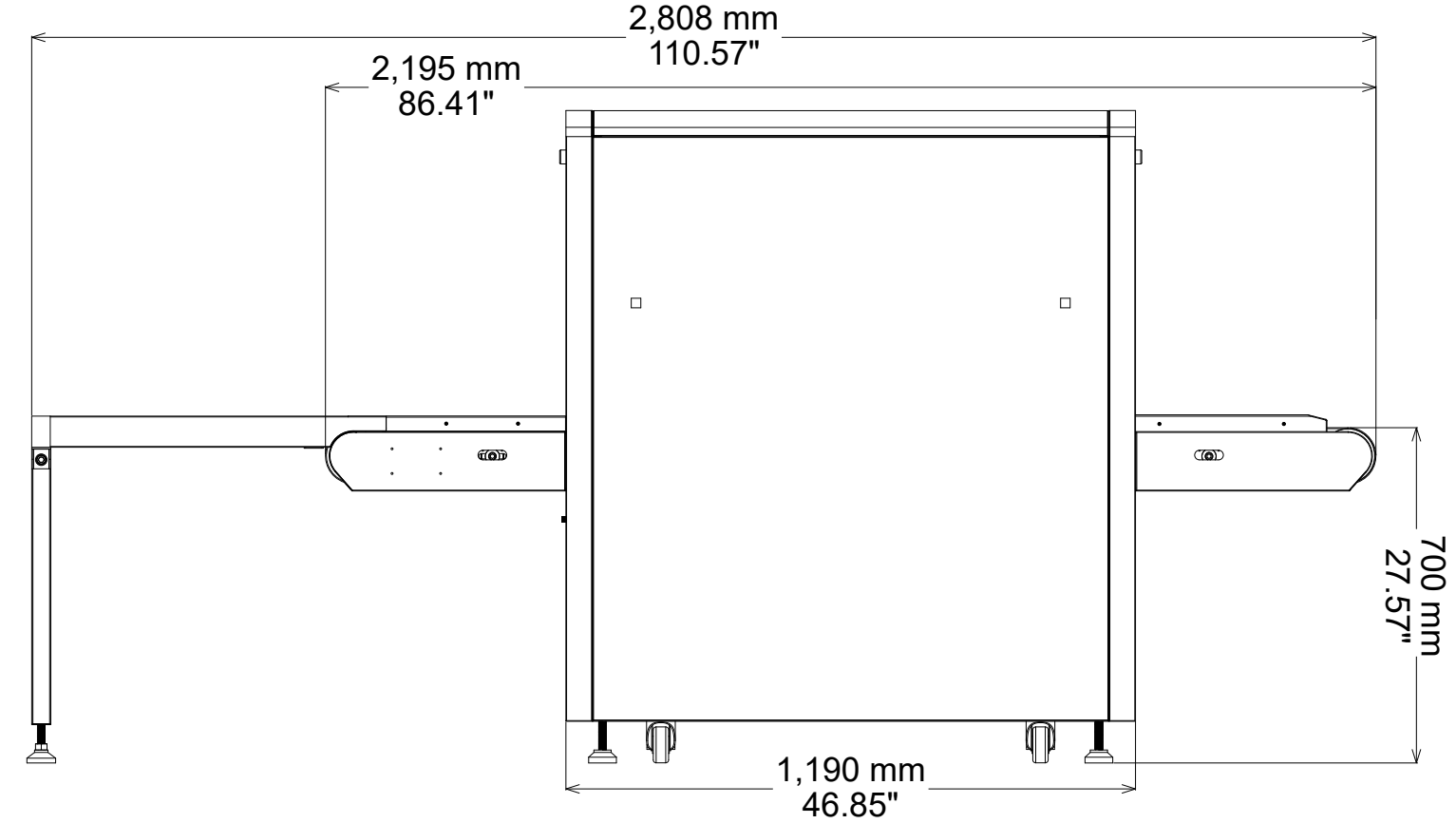
2,808 mm
110.57"
2,195 mm
86.41"
700 mm
27.57"
1,190 mm
46.85"

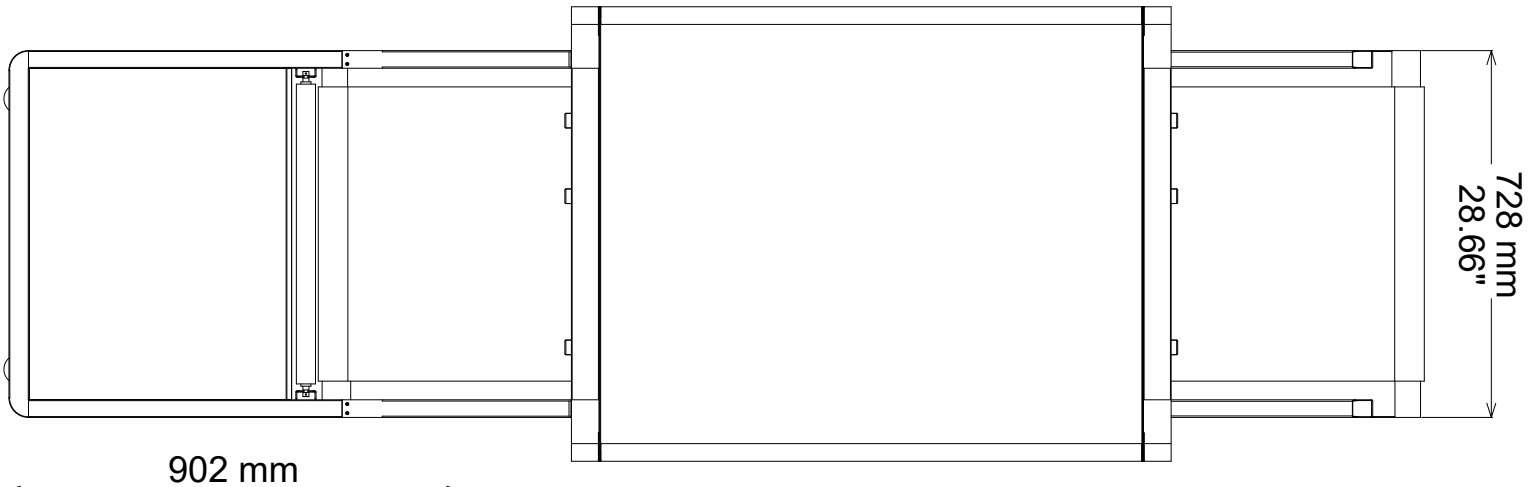
728 mm
28.66"

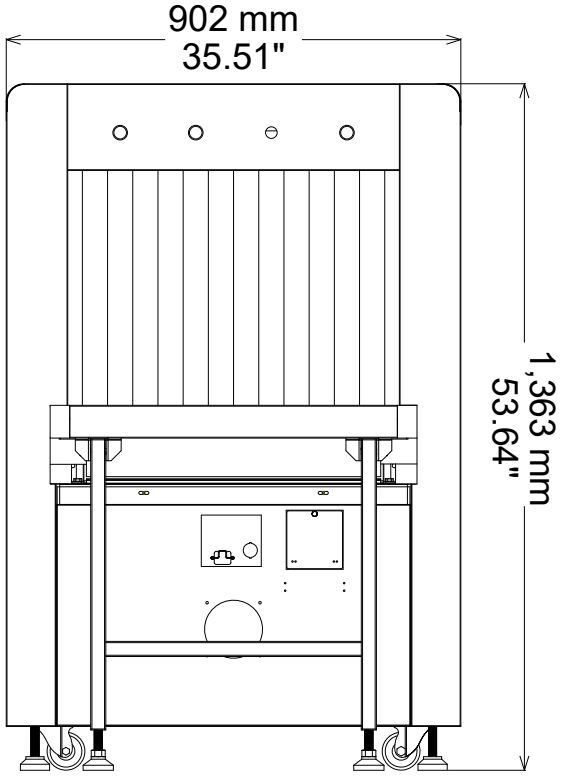
902 mm
35.51"
1,363 mm
53.64"

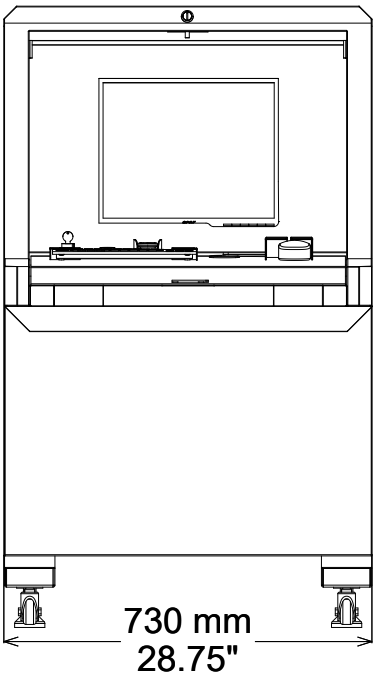
730 mm
28.75"

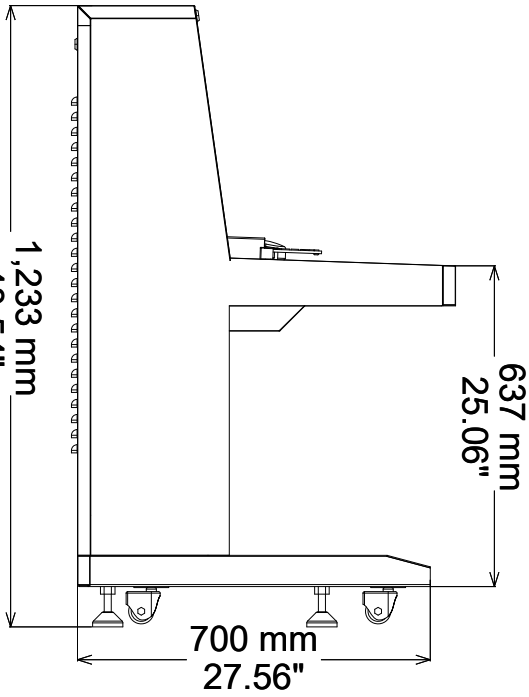
1,233 mm
48.54"
637 mm
25.06"
700 mm
27.56"