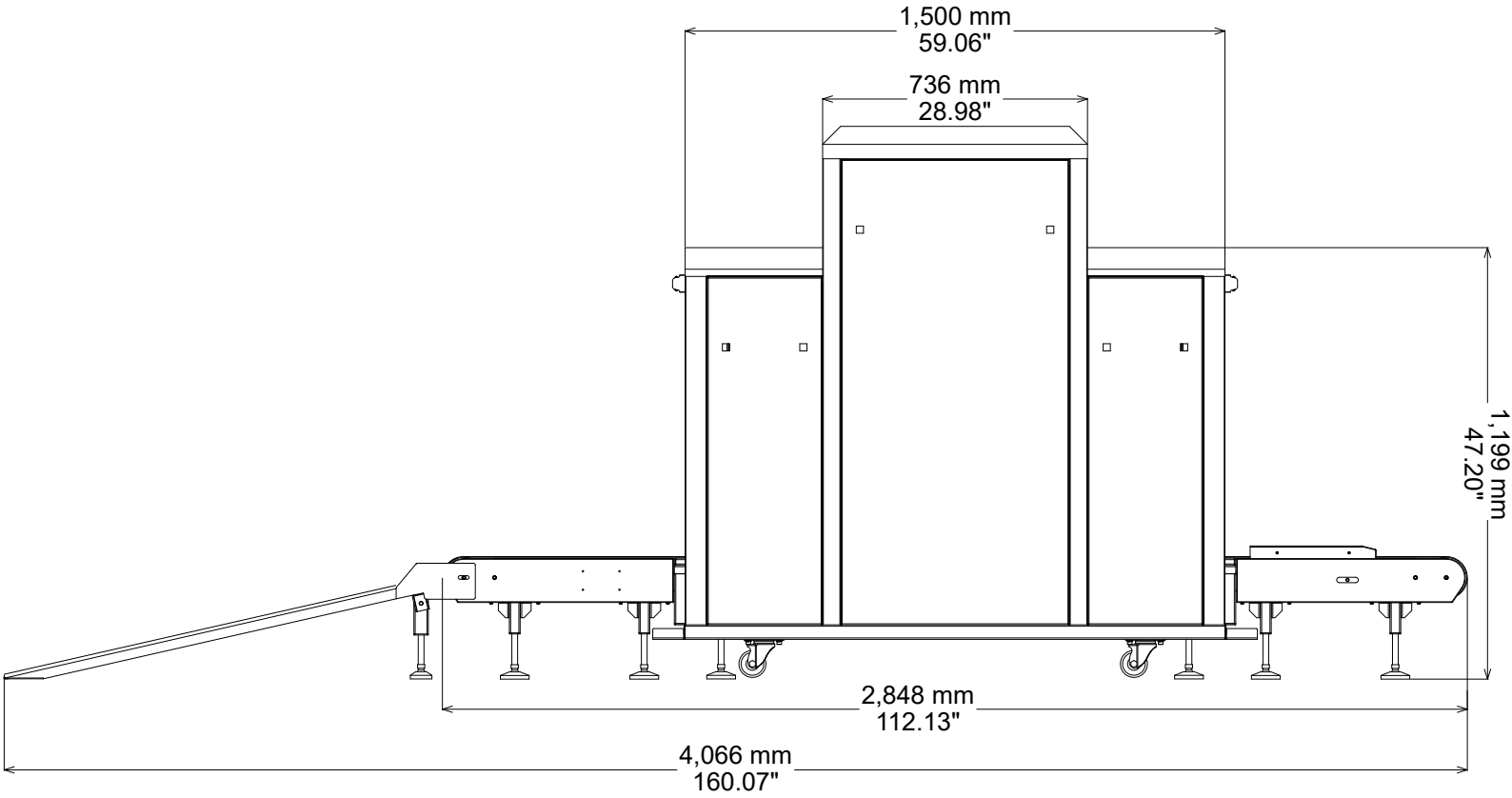
1,500 mm
59.06"
736 mm
28.98"
1,199 mm
47.20"
2,848 mm
112.13"
4,066 mm
160.07"

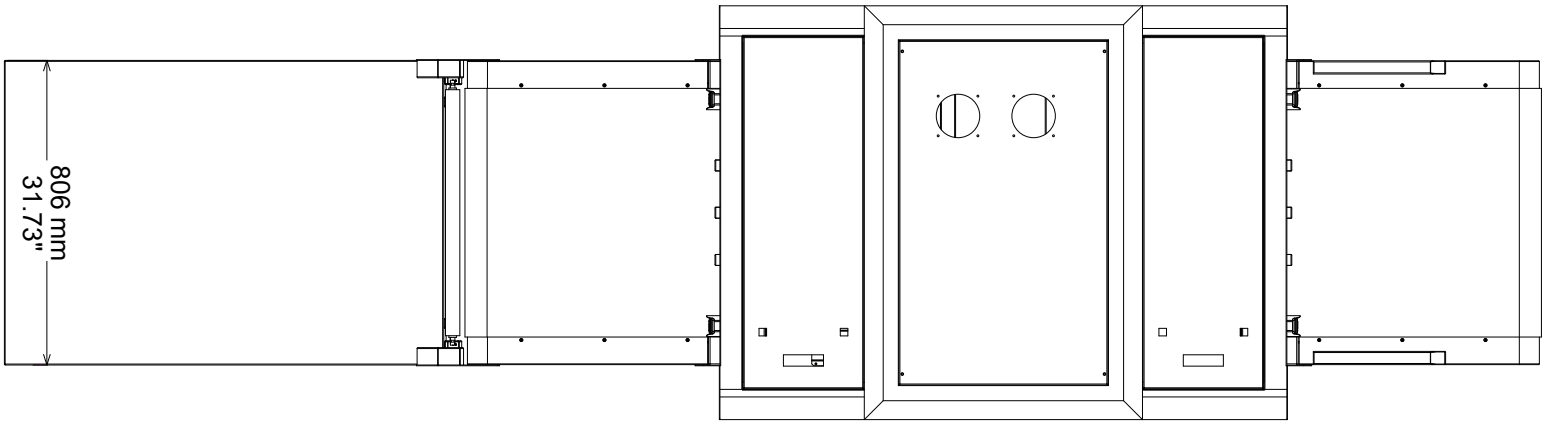
806 mm
31.73"

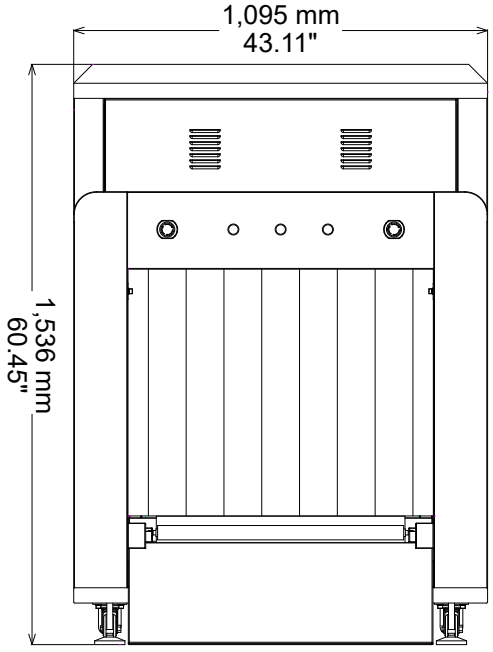
1,095 mm
43.11"
1,536 mm
60.45"

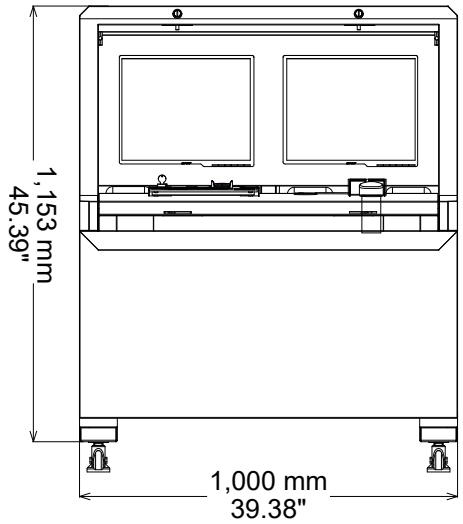
1,153 mm
45.39"
1,000 mm
39.38"

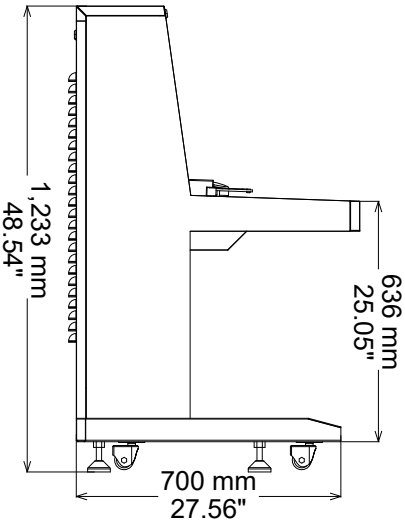
1,233 mm
48.54"
636 mm
25.05"
700 mm
27.56"