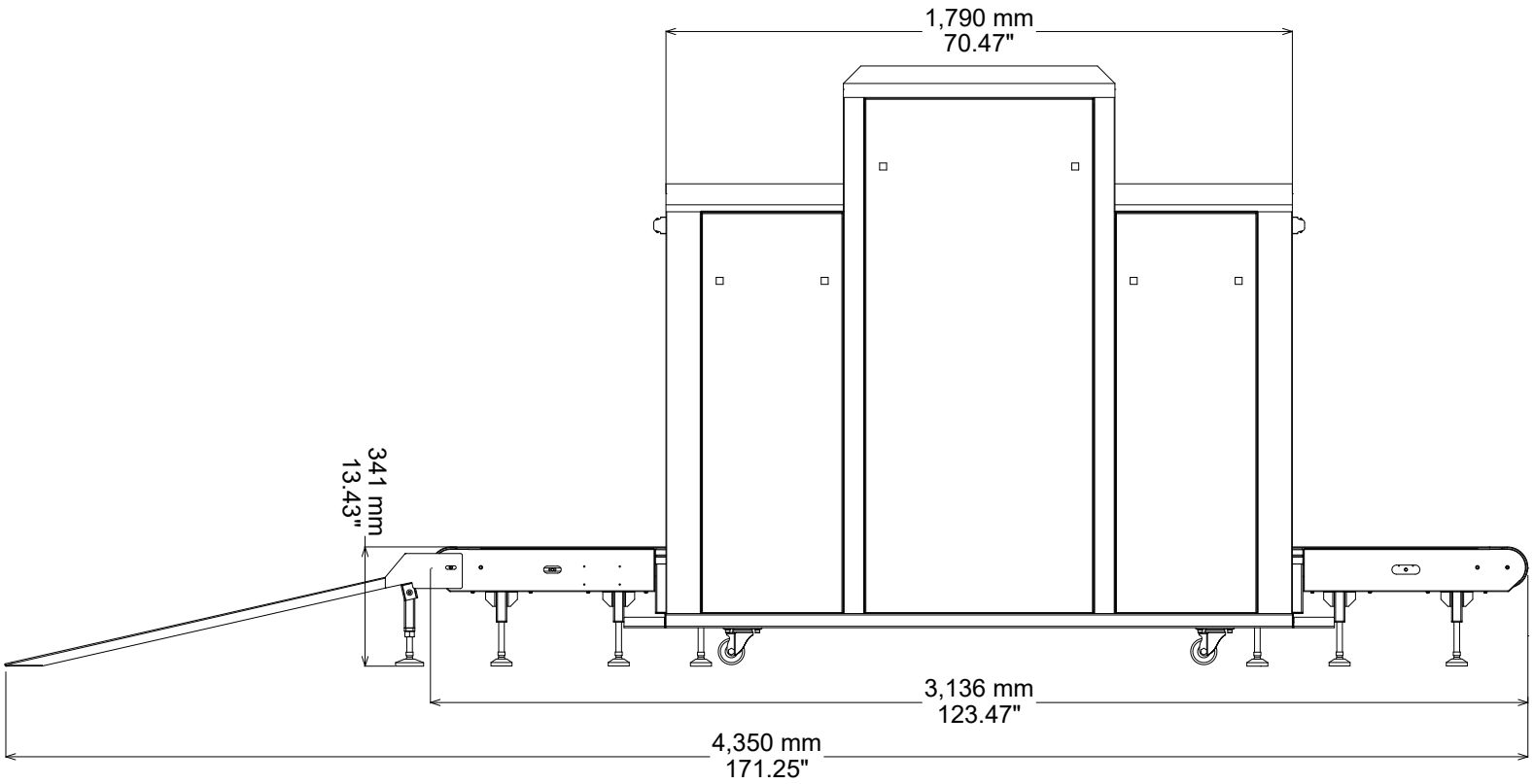
1,790 mm
70.47"
341 mm
13.43"
3,136 mm
123.47"
4,350 mm
171.25"

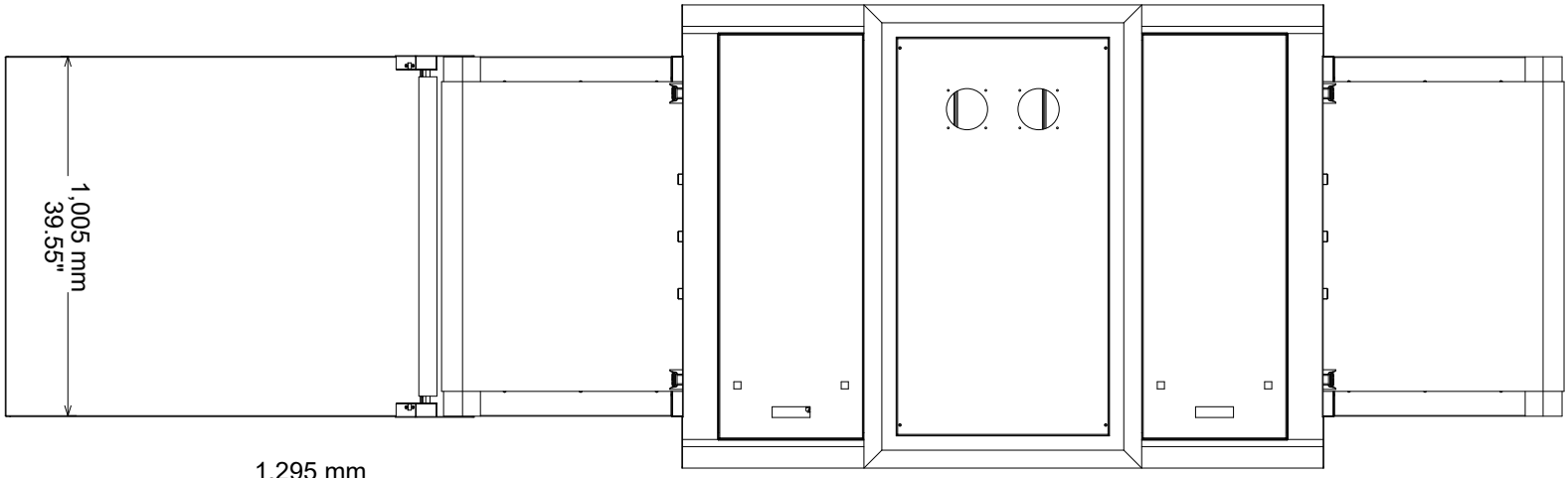
1,005 mm
39.55"

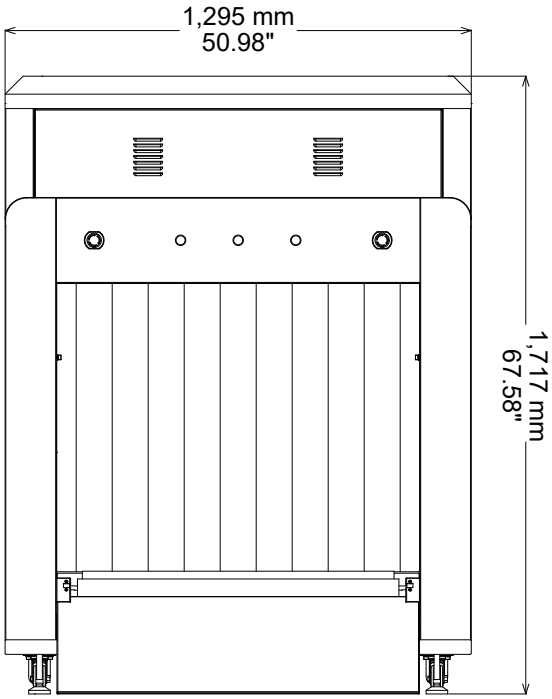
1,295 mm
50.98"
1,717 mm
67.58"

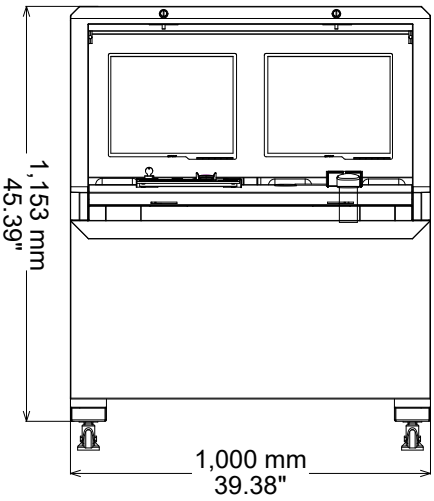
1,153 mm
45.39"
1,000 mm
39.38"

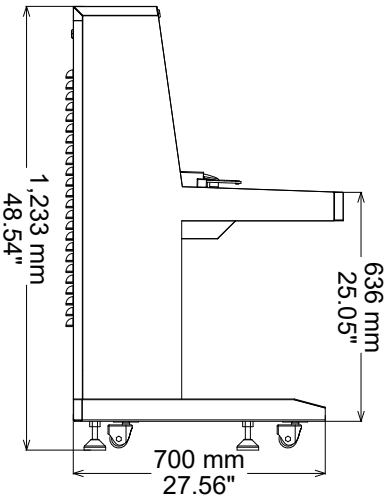
1,233 mm
48.54"
636 mm
25.05"
700 mm
27.56"