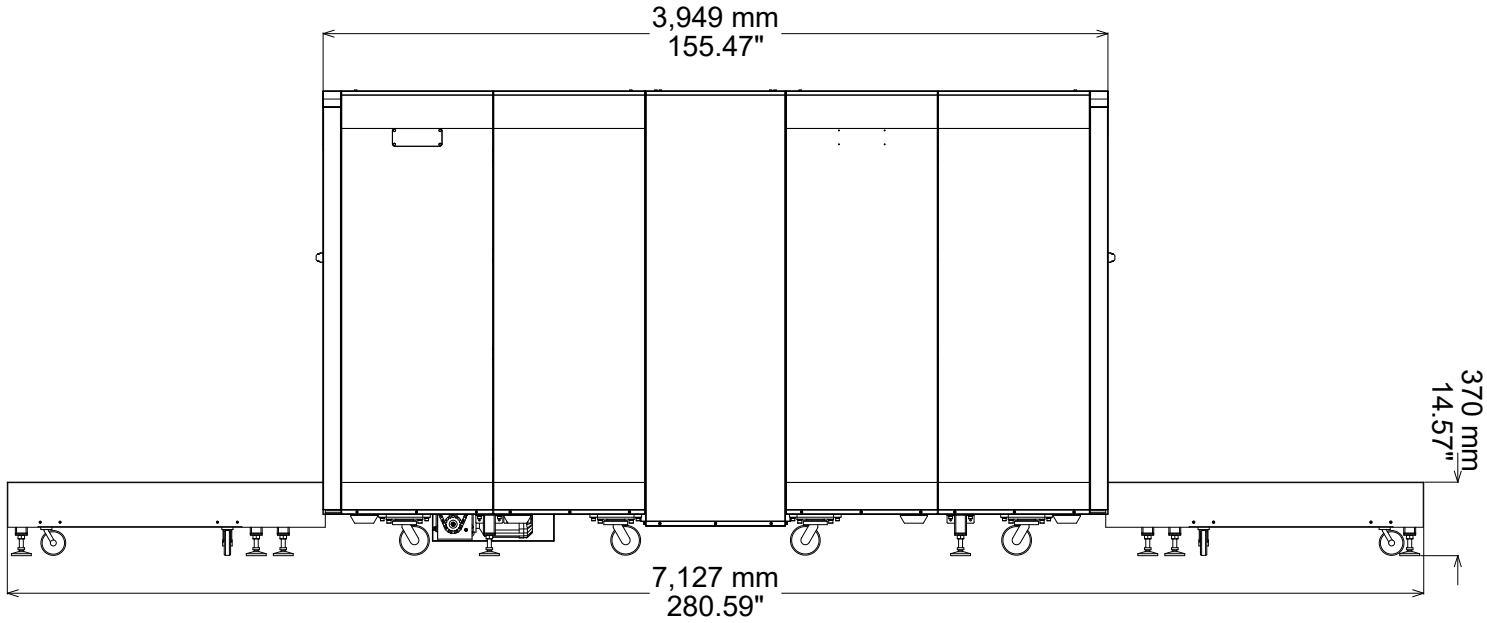
3,949 mm
155.47"
370 mm
14.57"
7,127 mm
280.59"

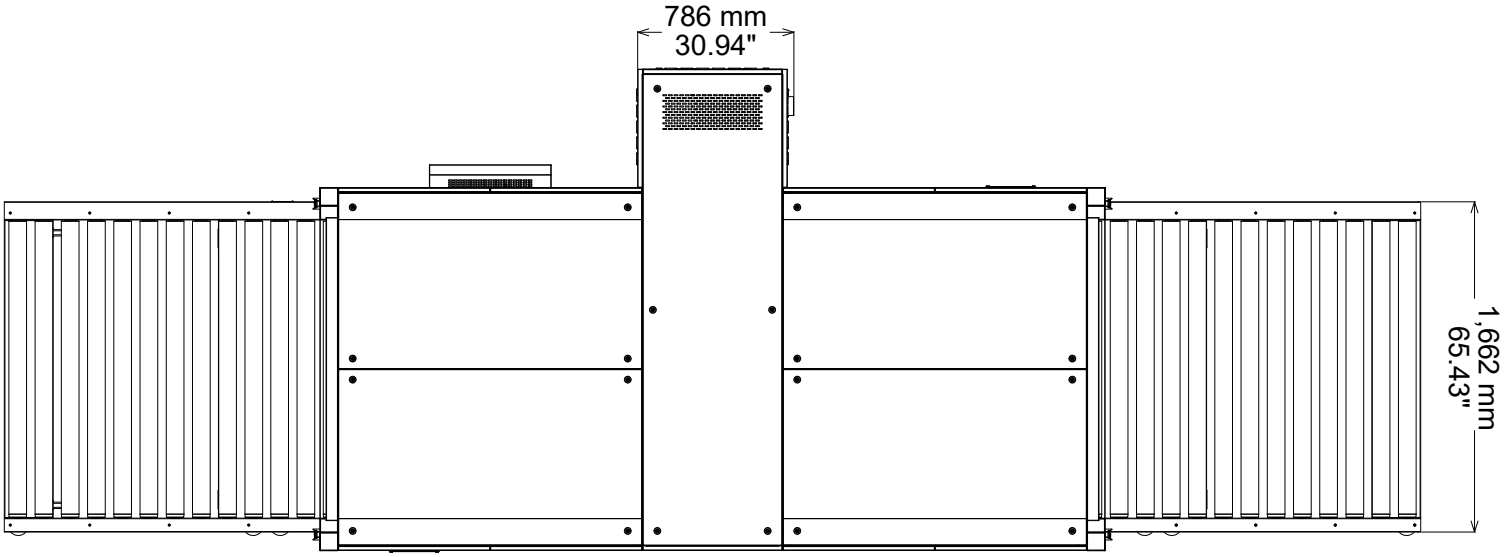
786 mm
30.94"
1,662 mm
65.43"

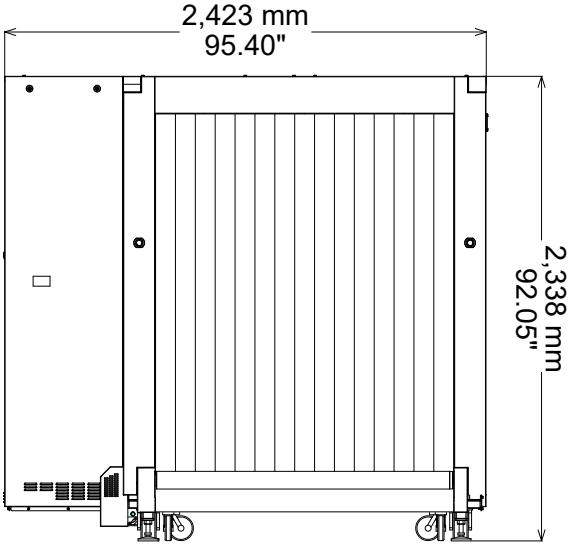
2,423 mm
95.40"
2,338 mm
92.05"

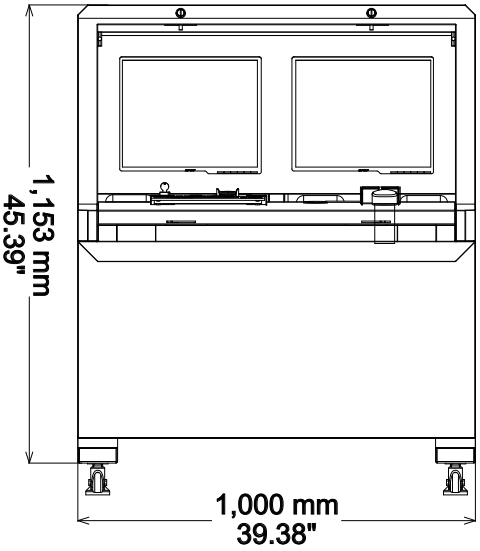
1,153 mm
45.39"
1,000 mm
39.38"

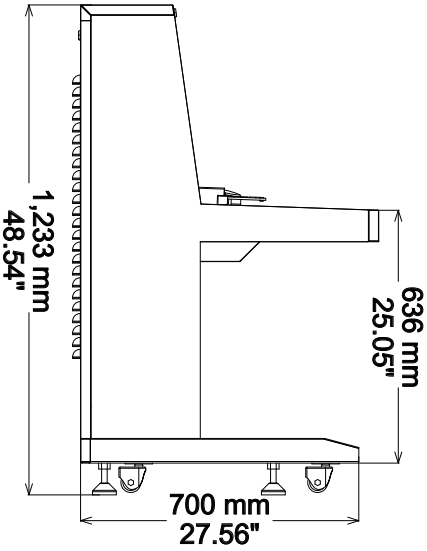
1,233 mm
48.54"
636 mm
25.05"
700 mm
27.56"